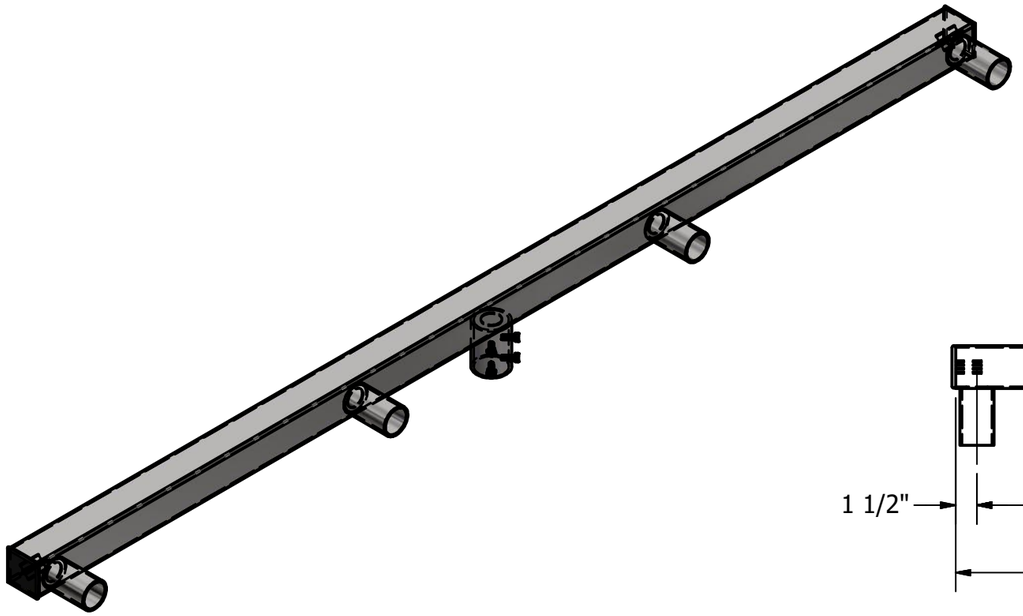

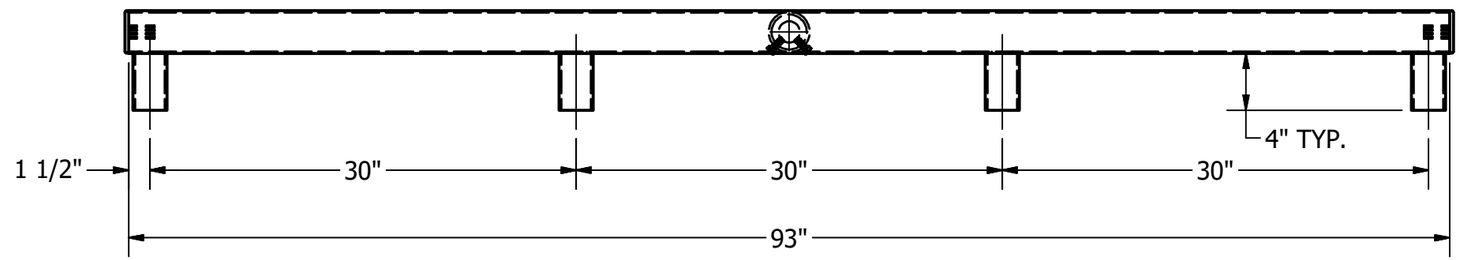

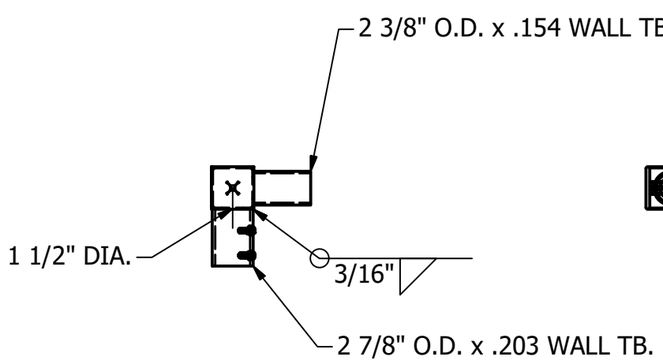

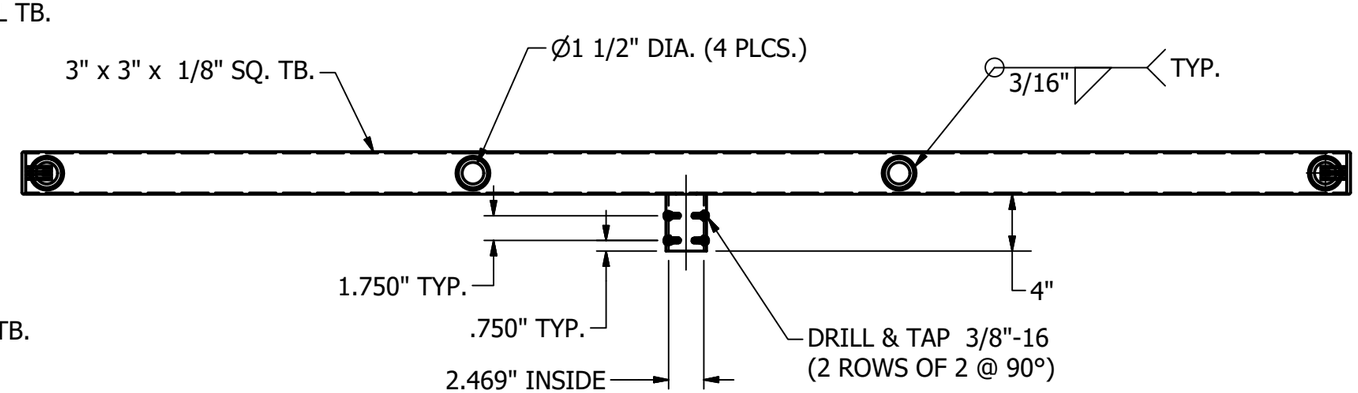

FOR GALVANIZED BRACKETS ONLY DRILL
& TAP 3/8"-16 .010 OVERSIZED TAP.

TOTAL WT. = 43.632 lbmass

REV	DATE	BY	DESCRIPTION

THIS DOCUMENT CONTAINS PROPRIETARY INFORMATION. DUPLICATION OR DISCLOSIER IS PROHIBITED WITHOUT THE EXPRESSED WRITTEN CONSENT OF FABRICATED METALS LLC

TOLERANCES: UNLESS OTHERWISE SPECIFIED

FRACTIONAL	±1/8"
2 PLACE DEC.	±.03
3 PLACE DEC.	±.005
ANGULAR	± 1°

DRAWN BY:	P. DAUGHERTY
APPROVED:	PD
ECN:	
SCALE:	3/32" = 1"
DATE:	9/9/2020

UTILITY METALS
(A DIVISION OF FABRICATED METALS LLC.)

DESCRIPTION: 4 LIGHT 30" HORIZONTAL ROUND SQUARE ROUND BRACKET TO SLIP 2 3/8" TENON

PART NO. HRSR-B4-2

DWG NO. G-9369-0

REV 0